THIS DRAWING MUST BE RETURNED TO
C&R OR DESTROYED UPON REQUEST

THE INFORMATION CONTAINED IN THIS DRAWING IS THE SOLE PROPERTY OF
C&R RACING INC. ANY REPRODUCTION IN PART OR WHOLE
WITHOUT THE WRITTEN PERMISSION OF C &R RACING INC.IS PROHIBITED

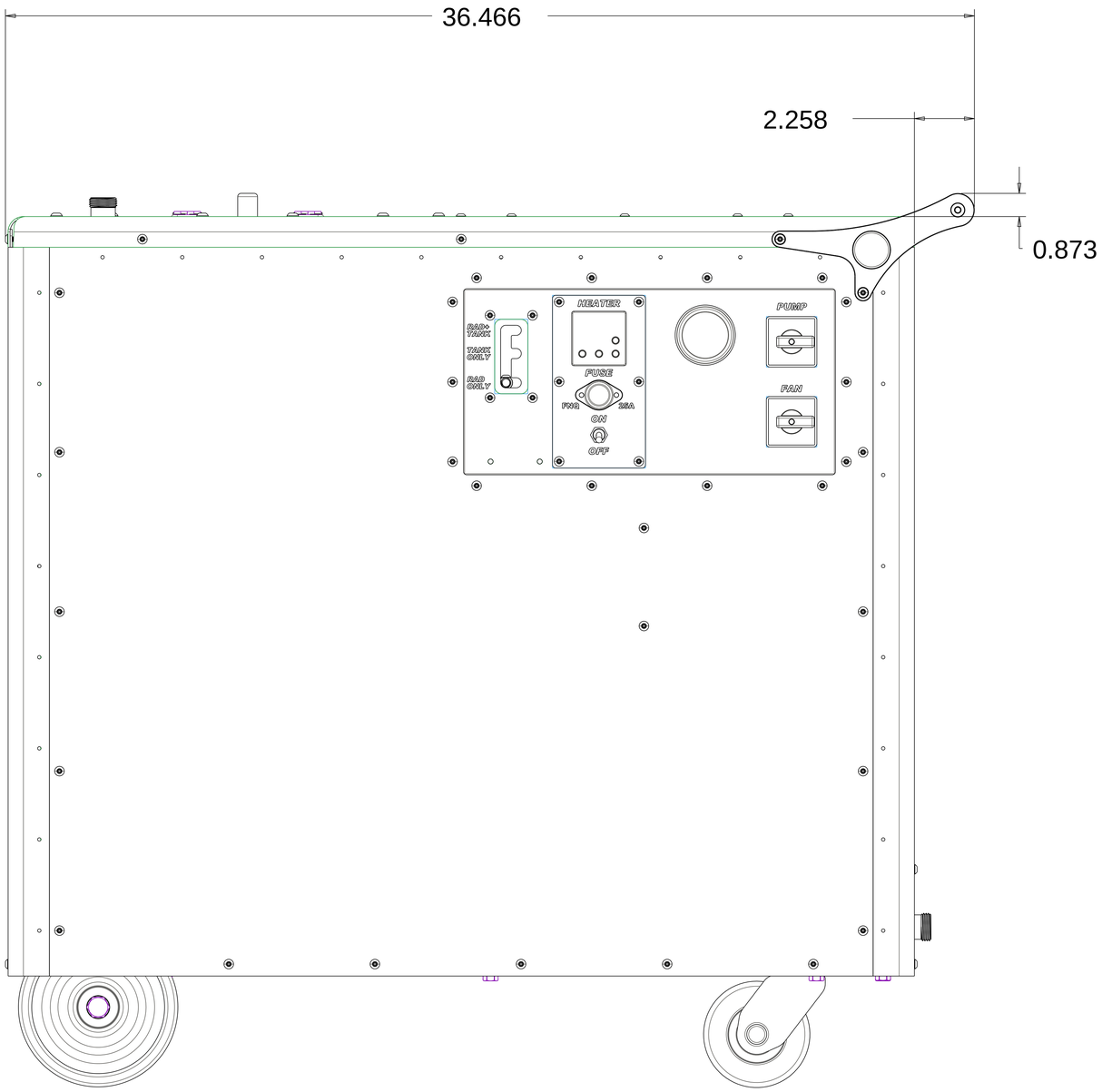

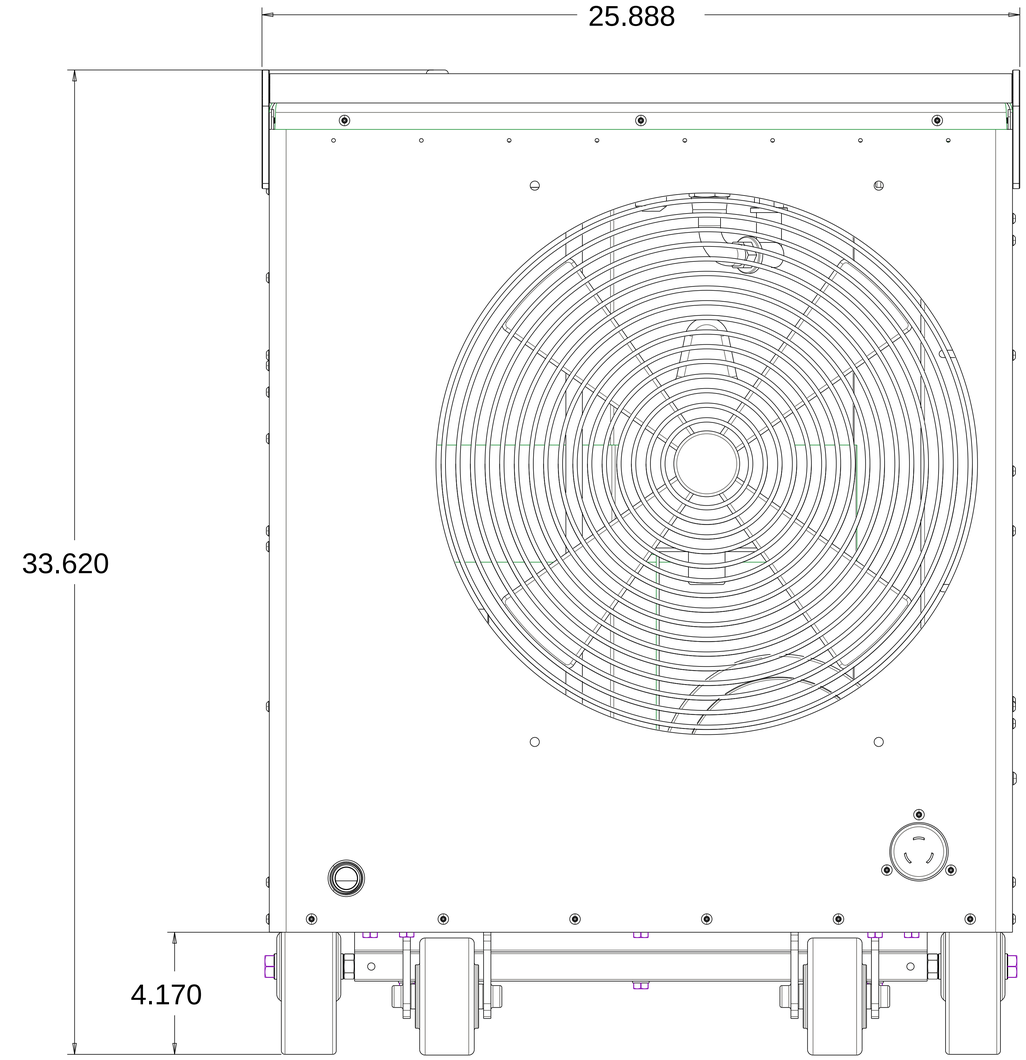

C&R RACING INCORPORATED

6950 GUION ROAD
INDIANAPOLIS, INDIANA 46268
PHONE: 317-293-4100
FAX: 317-293-4110 WWW.CRRACING.COM

THIRD ANGLE PROJECTION

PLEASE INFORM C &R OF DRAWING ERRORS
3D CAD MODEL AVAILABLE ON REQUEST

REMOVE ALL BURRS AND SHARP EDGES

DIMENSIONS IN INCHES ANGLES IN DEGREES
•TOLERANCE AS BELOW UNLESS OTHERWISE STATED

1 DECIMAL PLACES	0.0 ±0.10
2 DECIMAL PLACES	0.00 ±0.10
3 DECIMAL PLACES	0.000 ±0.05
4 DECIMAL PLACES	0.0000 ±0.02
ANGLES	0° ±5°

DO NOT SCALE
IF IN DOUBT ASK

WEIGHT

ISSUE	MODIFICATIONS	BY	CHK	DATE
P1	PROTOTYPE RELEASE			

DRAWN	CHKD. BY	DATE	SCALE
TE		08/24/07	1:2

MATERIAL	FINISH
VARIOUS	CLEAN

TITLE	PART NUMBER
GEN3 CIRCULATOR OVERALL DIMENSIONS	CR-NC-BDA001A